SMART WIRED TECH
DISTRIBUCIONES

# SMART-AE-BOX-403025IP65

CABINET
RANGE

## SMART-AE-BOX-403025IP65

| | |
|---|---|
| Material | Stainless steel - monoblock welded structure |
| Model | IP65 |
| Width | 600 mm |
| Height | 9U (490 mm) |

Please contact for different sizes Zamak lever 3-point locking system.

Main Material outer 1.2mm galvanised DX51 D+Z275

Integrated fan filter housing.
600 hours salt spray test resistance with RAL7035 epoxy polyester powding coating.
Antigrafitti and insulpaint can be applied.
IP65 protecction level.
Polyurethane sealing system for IP protection.
Loading capacity: 80kg.

+34 91 929 33 41
info@swtd.es

CABINET
# RANGE

## SMART-AE-BOX-403025IP65

## IP65 CABINET

IP65 cabinet is an all-weather outdoor electrical equipment protection box. It is designed to be waterproof, dustproof, heat-resistant, anti-UV, anti-theft, anti-rust, acid and alkali corrosion resistant, and anti-electromagnetic interference (including lightning EMP). The box has a modular structure that allows vertical or horizontal installation of electrical equipment according to requirements. With components such as 4G LTE router, outdoor wireless transmitter, solar powered PoE switch, IoT M2M gateway and mesh AP, it is ideal for outdoor applications such as CCTV, WLAN, Wi-Fi coverage and Industrial IoT. This setup offers flexible modular installation, significantly reducing project deployment costs.

IP65 Ingress Protection ensures excellent dustproof and waterproof capabilities for outdoor equipment protection. Rugged construction with IK10 Inverse Kinematics allows the box body to resist deformation from significant external forces. Advanced Outdoor Protection features aluminum alloy or 304 stainless steel connecting mounting parts, Electrostatic powder spraying main body for anti-aging, gas corrosion resistance, UV damage resistance, acid and alkali corrosion resistance, and salt spray moisture resistance. Modular Installation design includes detachable components like top cover, side panel, DIN-rail, mounting plate, waterproof connector, fan, and microswitch. Heat Dissipation is facilitated by a top fan and bottom cable and ventilation holes that create a bottom-up air duct for effective cooling.

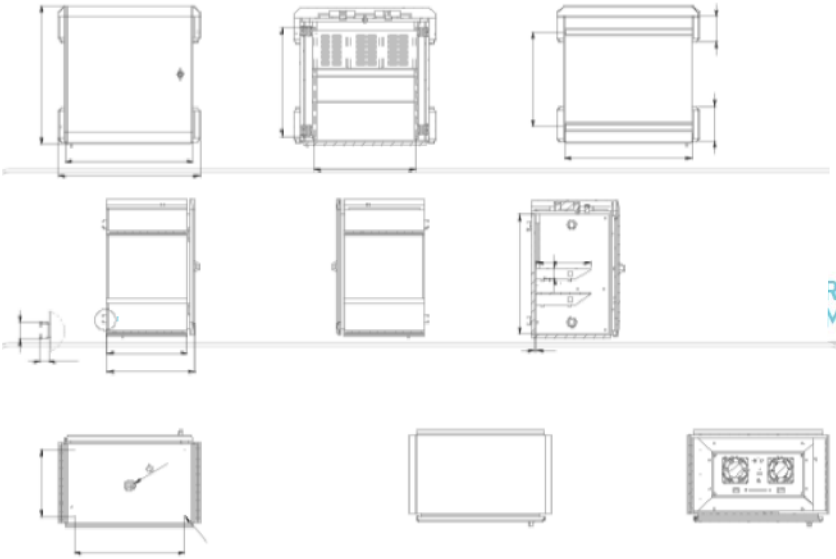

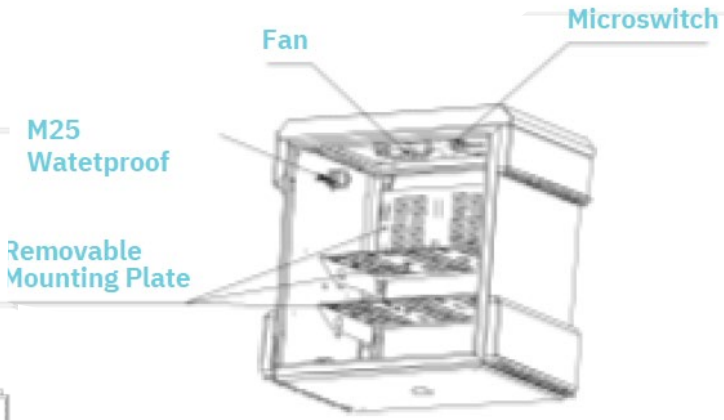


SMART WIRED TECH
DISTRIBUCIONES